Specification Change List

Date	Revision	Change item
2019/11/18	A0.1	Initial version
2020/1/7	A0.2	2.0 Correct 3.3v min. load

1.0 INPUT:

1.1 VOLTAGE

	MINIMUM	MAXIMUM	UNITS
INPUT RANGE	90	264	Vrms
RATED RANGE	100	240	Vrms

1.2 FREQUENCY

47Hz ~ 63Hz

1.3 CURRENT

8A/100V, 4A/240V

1.4 INRUSH CURRENT

115V/50A (max.), 230V/100A (max.) at 25°C (cold start)

1.5 POWER EFFICIENCY

At 20%/50%/100% load AC 115V 60Hz and AC 230V 50Hz, the power efficiency should be at least 82%/85%/82%.

1.6 STANDBY MODE

During measurement of the **"STANDBY MODE"** condition, the main converter is off (PS_ON=High). +5Vsb converter is working and standby input power is measured.

Load Condition	Efficiency	Power in
<45mA	**----**	**<0.45W**
45mA	**>=50%**	**----**
100mA	**>=55%**	
250mA	**>=65%**	**----**
1.0A	**>=75%**	**----**
***2013 ErP Standby efficiency**		

1.7 ACTIVE POWER FACTOR CORRECTION (PFC):

>0.9 at 50% load, AC 115v 60Hz

2.0 OUTPUT:

GROUP	1					2
VOLTAGE	**+3.3V**	**+5V**	**+12V1**	**+12V2**	**-12V**	**+5VSB**
MAX.LOAD	24A	24A	17.0A	17.0A	0.3A	2.5A
MIN.LOAD	0.3A	0.5A	0.25A	0.25A	0.05A	0A
VOLTAGE REGULATION	±5%	±5%	±5%	±5%	±10%	±5%
RIPPLE & NOISE (mV)	50	50	120	120	120	50
Capacitive Loads_(uF)	10000	10000	20000		330	10000

NOTE:

1. The continuous maximum total output power shall not exceed 500W.

   +12V DC maximum output power shall not exceed 34A(408W).

   +3.3V and +5V DC maximum combined output power shall not exceed 130W.

2. Maximum peak total DC output power should not exceed 550W, and should be supported for 12 Seconds maximum, one occurrence maximum per minute (115Vac 60Hz, 230Vac 50Hz).
3. When +12V1&+12V2 output at 34A, the -12V output load min 0.1A.
4. When 3.3V output at 24A, the +12V1&+12V2 total output load min 3A.
5. When 5V output at 24A, the +12V1&+12V2 total output load min 3A.
6. +3.3V, +5V and +12V DC output voltage should be within Figure 1 cross loading range to meet regulation.
7. Ripple and Noise measuring with an oscilloscope with 20 MHz bandwidth in Figure 1 cross loading range. Output should be bypassed at the connector with a 0.1uF ceramic disk capacitor and a 10uF electrolytic capacitor to simulate system load. The length of ground wire on probe should not longer than 40mm, if a Non - differential type of scope was used.

2.1 CROSS REGULATION

The +5V & +3.3V combined load and +12VDC load shall remain within the defined in section 2.0 over cross load combinations shown Figure 1:

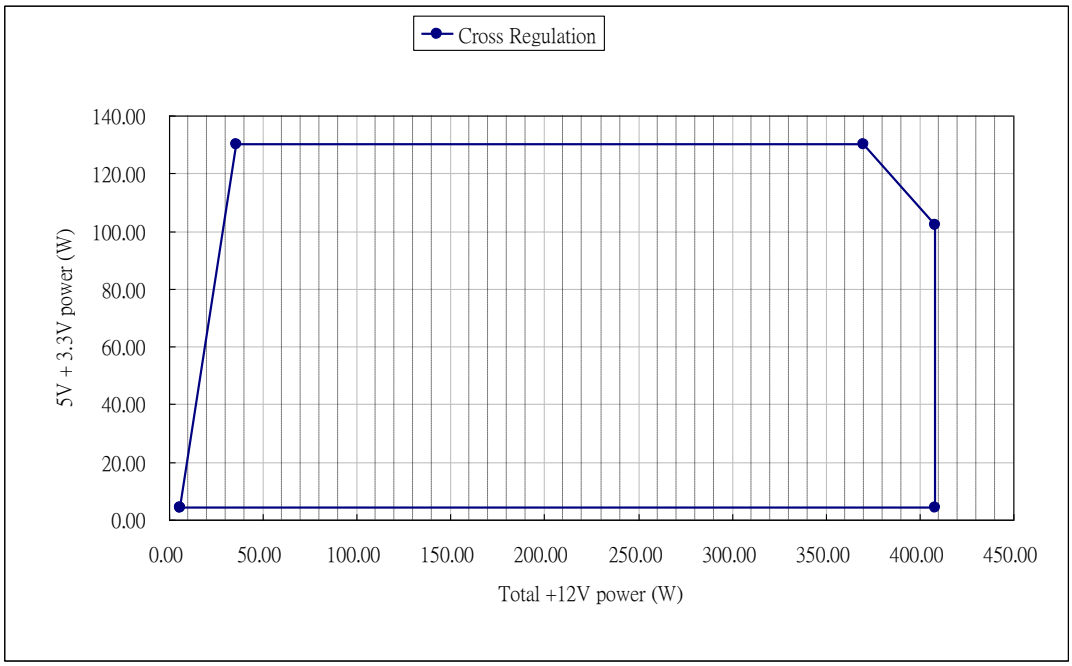

Figure 1

2.2 HOLD-UP TIME: 10ms(minimum)

Test Condition: 100% load @ AC input 115V or 230V, 47Hz .

2.3 LOAD TRANSIENT RESPONSE (STEP LOAD)

Output transient step sizes for each output are defined in following table:

Output	Maximum Step Size (% of rated output amps)	Maximum Step Size (A)
+12Vdc	30%	-
+5Vdc	30%	-
+3.3Vdc	30%	-

Load slew rated 1.0A/uS and capacitive load defined in DC output table.

2.4 OVERSHOOT

Overshoot at turn on or turn off shall be less than 10% of the nominal output voltage.

2.5 TIMING, HOUSEKEEPING AND CONTROL

A low active PS-ON (DC ON/OFF) input signal is equipped, which provide the interface **ENABLE** or to **DISABLE** the **GROUP1** of DC output. This signal is electrically to interface with **TTL,OPEN COLLECTOR** and the **HARD SWITCH.**

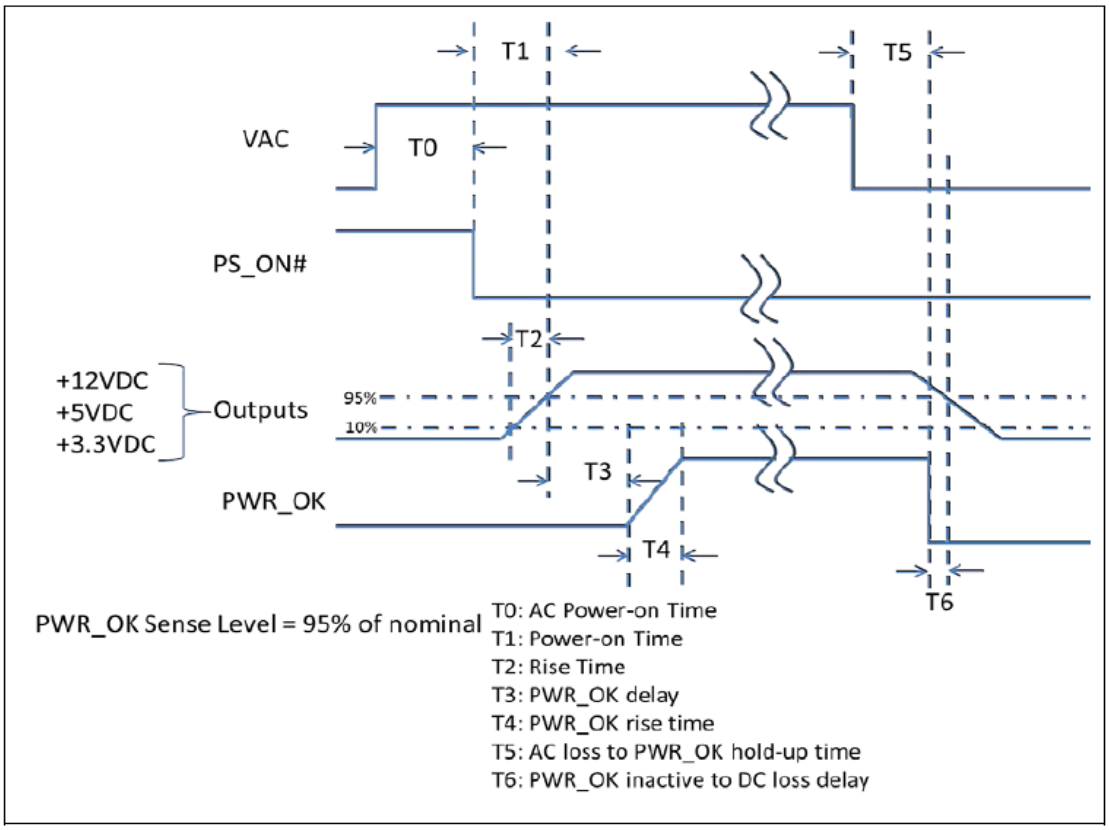

SIGNAL NAME		MAXIMUM	MINIMUM
T0	AC power on time	2S	
T1	PS_Power-on time	500mS	
T2	Rise time from each main output	20mS	0.2mS
T3	PWR_ok delay	500mS	100mS
T4	PWR_ok rise time	10mS	
T5	AC loss to PWR_OK hold-up time		10mS
T6	PWR_OK inactive to DC loss delay		1mS

2.5.1 POWER GOOD SIGNAL:

Signal Type: open collector +5DC, TTL compatible.

Logic Level: <0.4V while sinking 4 mA.

Logic Level High: between 2.4VDC and +5V output while sourcing 200 uA.

Max Ripple/Noise: 400mV pk-pk. (no capacitor test)

3.0 OUTPUT PROTECTION

3.1 TOTAL POWER PROTECTION: (OPP)

Total power 150% max with shut-down and latch off protection.

3.2 OVER VOLTAE PROTECTION: (OVP)

OUTPUT VOLTAGE	MAX. ACT. VOLTAGE	RESULT
+3.3V	4.5V	Shut down & Latch OFF.
+5V	7.0V	
+12V	15.6V	
+5Vsb	7.0V	Auto restart.

3.3 SHORT CIRCUIT PROTECTION: (SCP)

The short between any output of group 1 will shut down all group1.

The short at group 2 will shut down both group 1 and group 2.

3.4 NO-LOAD SITUATION

No damage or hazardous condition should occur with all the DC output connectors disconnected from the load. The power supply may latch into the shutdown state.

3.5 RESET AFTER SHUTDOWN

Whenever the power supply latches into shutdown state due to fault condition on its output, the power supply will return to normal operation only after the fault has been removed and the PS_ON# has been pulled low again. If the power supply latches into shutdown state due to fault condition on 5Vsb, the power supply will return to normal operation only after the fault has been removed and the power switch(power cord) has been cycled off/on(plugged out/in) with A MINIMUM OFF TIME OF 3 SECONDS.

4.0 COOLING OF POWER SUPPLY

A DC fan was equipped to cooling the power supply, the fan will blow air into power supply and exhaust through the vent holes in AC receptacle side. **This fan is only for power supply internal cooling purpose, not for system cooling.**

Fan parameters:

Rated Voltage	12VDC
Dimension	120*120*25(mm)

5.0 ENVIRONMENT

5.1 OPERATING

AMBIENT OPERATION TEMPERATURE: 0 to 40 ^{o}C.

AMBIENT OPERATION RELATIVE HUMIDITY: 20 to 90% relative humidity (non-condensing)

OPERATION ALTITUDE: 0 to 10,000 feet.

5.2 SHIPPING / STORAGE

AMBIENT STORAGE TEMPERATURE:-40 to 85 Deg C

AMBIENT STORAGE RELATIVE HUMIDITY: 5 to 95% relative humidity (non-condensing)

6.0 MTBF

Over 100,000 hours at 25 Deg C. excluding the DC Fan.

7.0 EMC

EN55032:2015+AC: 2016 Class B
EN61000-3-2: 2014 Class A/D
EN61000-3-3: 2013
EN55024: 2010+A1: 2015
FCC Part Subpart 15B
ANSI C63.4-2014
ICES-003 Issue6: 2016
CAN/CSA-CISPR 22-10
AS/NZS CISPR 32: 2015
CISPR 32:2015+C1: 2016
CNS13438 (2006)
GB/T9254-2008

8.0 SAFETY

IEC 62368-1: 2014
IEC 60950-1(ed.2); am1; am2
UL 62368-1: 2014
CAN/CSA-22.2 No.62368-1: 2014

EN 62368-1: 2014

GB17625.1-2012; GB4943.1-2011

CNS14336-1(2010), CNS15663 (2013)

9.0 MECHANICAL

Dimension: W 150mm x L 140mm x H 86mm, +/-1mm.